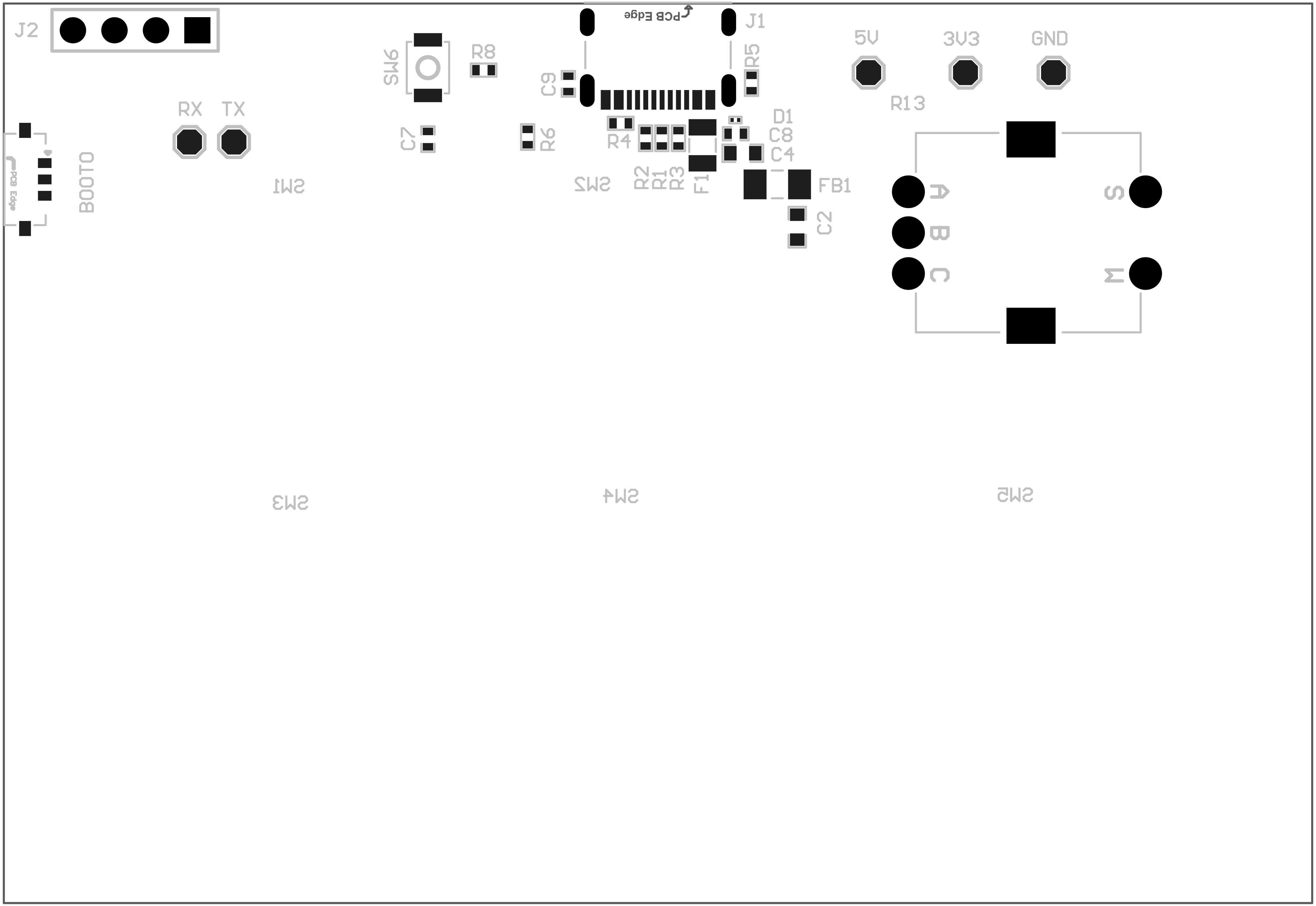
J2
SW6
R8
C9
PCB Edge
J1
R5
5V
3V3
GND
R13
RX
TX
C7
R6
R4
D1
C8
C4
BOOT0
PCB Edge
SW1
SW2
R2
R1
R3
F1
FB1
C2
A
B
C
S
M
SW3
SW4
SW5

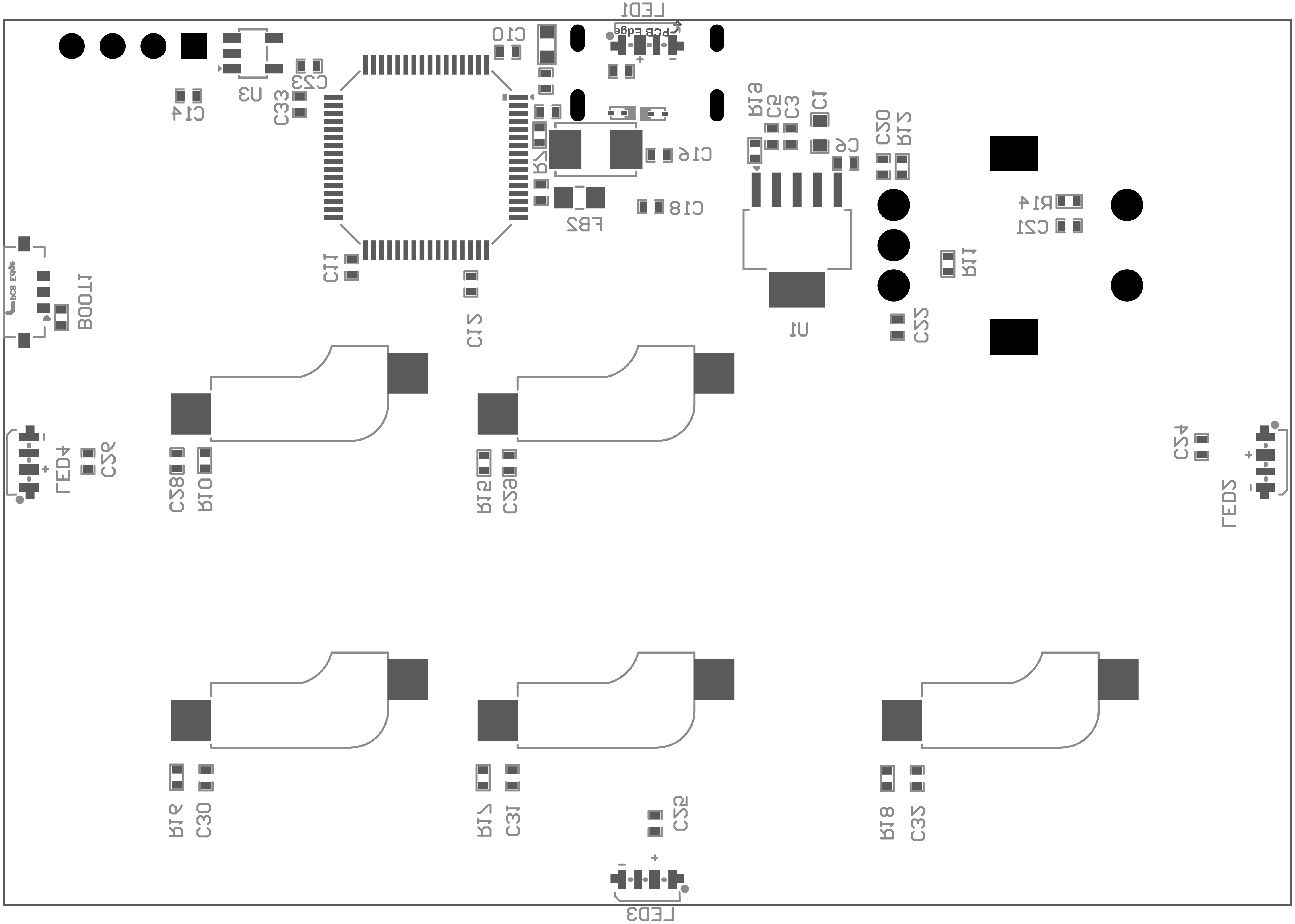
LED1
PCB Edge
+
-
C10
C23
C33
C14
U3
R19
C2
C3
C1
C20
R12
C9
C16
R7
C18
FB2
R14
C21
R11
C11
C12
U1
C22
PCB Edge
BOOT1
LED4
+
-
C26
C28
R10
R15
C29
C24
+
-
LED2
R16
C30
R17
C31
C25
R18
C32
-
+
LED3